Problematiche del ritmo cardiaco

Giulio Calcagni

UOC di Cardiologia S. Paolo, Palidoro-S. Marinella e Aritmologia
Dipartimento di Cardiochirurgia, Cardiologia e Trapianto Cuore-Polmone
giulio.calcagni@opbg.net

Bambino Gesù
OSPEDALE PEDIATRICO

British Heart Journal, 1973, 35, 937–945.

Electrocardiogram and vectorcardiogram in Turner phenotype with normal chromosomes and pulmonary stenosis

Knut Rasmussen[1] and Svein J. Sørland

From Medical Department B and Cardiac Section, Pediatric Department, University Hospital, Rikshospitalet, Oslo, Norway

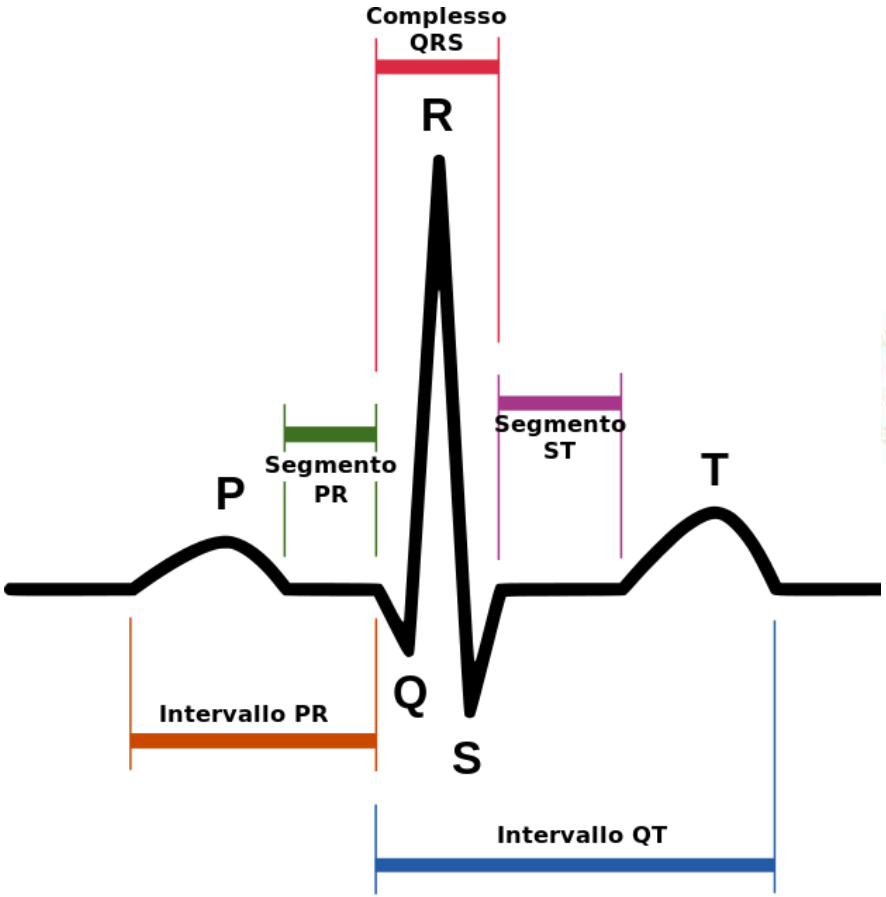
Complesso QRS
R
Segmento PR
Segmento ST
P
T
Q
S
Intervallo PR
Intervallo QT

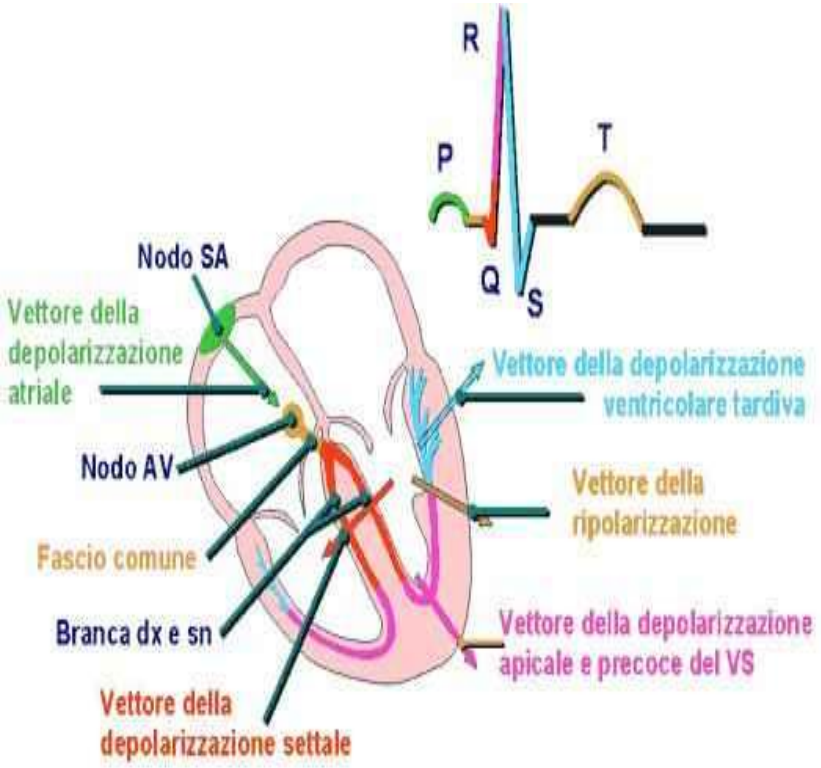
R
P
T
Q
S
Nodo SA
Vettore della depolarizzazione atriale
Vettore della depolarizzazione ventricolare tardiva
Nodo AV
Vettore della ripolarizzazione
Fascio comune
Branca dx e sn
Vettore della depolarizzazione apicale e precoce del VS
Vettore della depolarizzazione settale

ASSE ELETTRICO DEL CUORE

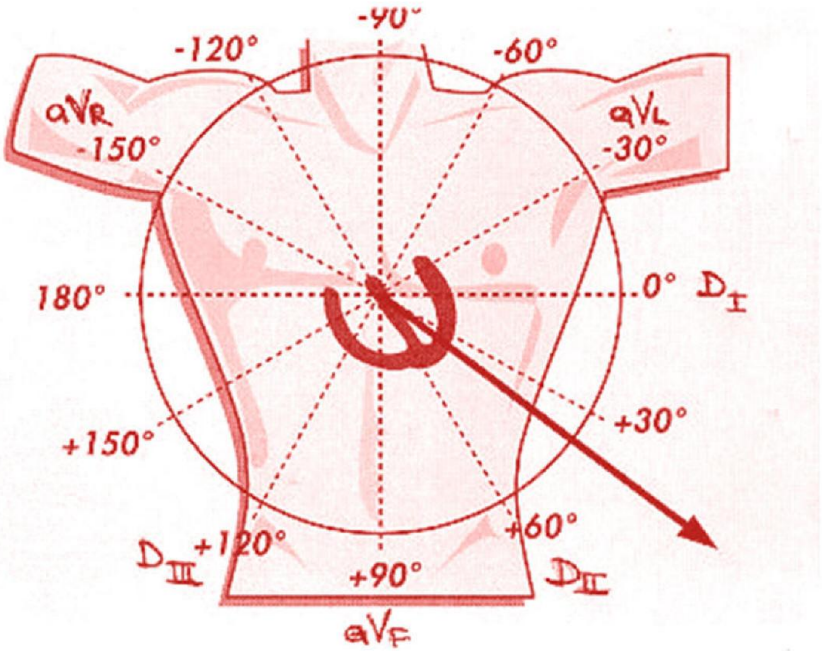

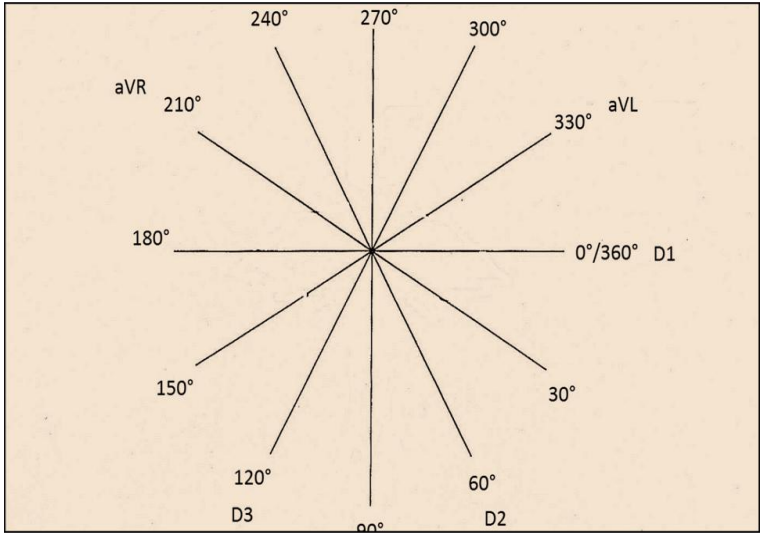

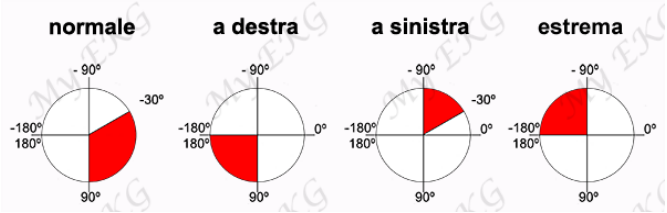

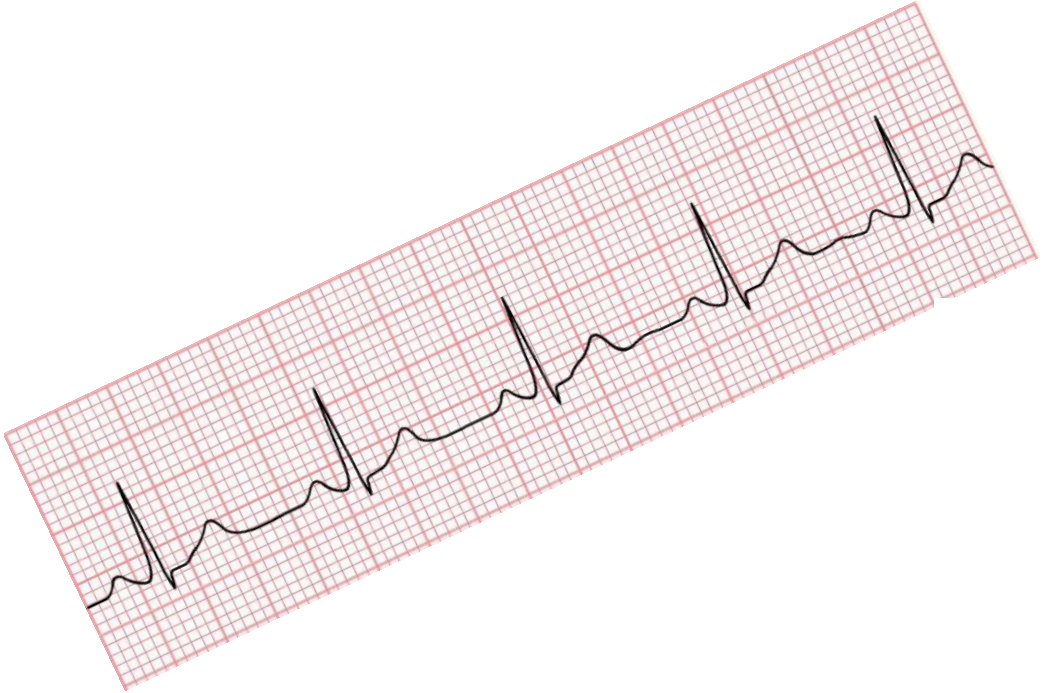

anomalie ECG in presenza di cardiopatia/cardiomiopatia

- ✓ stenosi polmonare
- ✓ difetto interatriale
- ✓ canale atrioventricolare
- ✓ cardiomiopatia ipertrofica

anomalie ECG in ASSENZA di cardiopatia/cardiomiopatia??

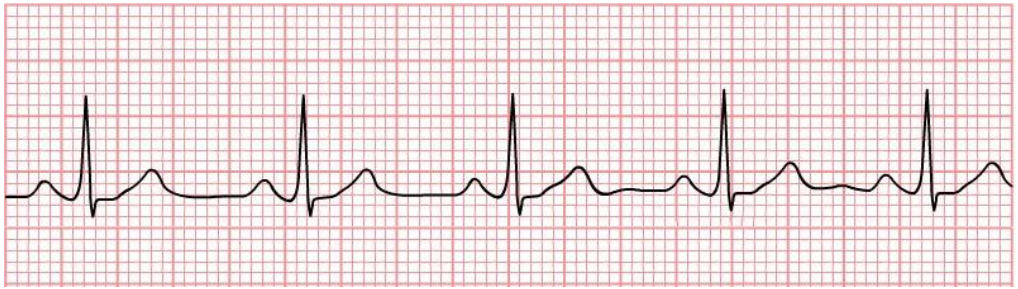

ECG in assenza di difetto cardiaco

- deviazione assiale sinistra
- onda R di piccole dimensioni nelle precordiali sinistre
  - R/S in v6 al di sotto dei limiti inferiori
  - onda R in V5 e V6 con voltaggi inferior al 50 centile
- complessi QRS larghi
  - QRS > 0.08 mesi sotto i 3 anni ;
  - QRS circa 0,10 mesi tra 3 e 12 anni
  - QRS circa 120 mesi >12 anni
- onda Q anomala (oltre 0.04 sec)

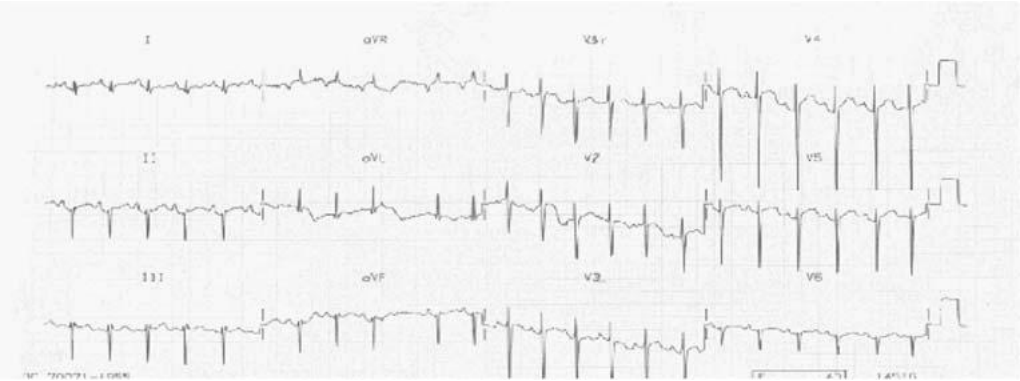

Eur J Pediatr 2008, Raaijmakers R
Am J Med Genet 2008, Croonen EA

ECG in assenza di difetto cardiaco

- ✓ possibile anche l'associazione di più di una delle precedenti caratteristiche
- ✓ non dimostrata un'associazione specifica di tali caratteristiche Ecg con specifici geni mutati

RESEARCH ARTICLE

AMERICAN JOURNAL OF medical genetics PART A

Clinical, Pathological, and Molecular Analyses of Cardiovascular Abnormalities in Costello Syndrome: A Ras/MAPK Pathway Syndrome

Angela E. Lin,[1*] Mark E. Alexander,[2] Steven D. Colan,[2] Bronwyn Kerr,[3] Katherine A. Rauen,[4,5] Jacqueline Noonan,[6] Jeanne Baffa,[7] Elizabeth Hopkins,[8] Katia Sol-Church,[9] Giuseppe Limongelli,[10] Maria Christina Digilio,[11] Bruno Marino,[12] A. Micheil Innes,[13] Yoko Aoki,[14] Michael Silberbach,[15] Marie-Ange Delrue,[16] Susan M. White,[17] Robert M. Hamilton,[18] William O'Connor,[19] Paul D. Grossfeld,[20] Leslie B. Smoot,[2] Robert F. Padera,[21] and Karen W. Gripp[8]

[1]Genetics Unit, MassGeneral Hospital for Children, Boston, Massachusetts
[2]Department of Cardiology, Boston Children's Hospital, Boston, Massachusetts
[3]Genetic Medicine, Academic Health Science Centre, Central Manchester Foundation Trust Manchester, UK
[4]Comprehensive Cancer Center, San Francisco, California
[5]Department of Pediatrics, Division of Medical Genetics, University of California, San Francisco, California
[6]Department of Pediatrics, University of Kentucky Medical Center, Lexington, Kentucky
[7]Nemours Cardiac Center, Wilmington, Delaware
[8]Division of Medical Genetics, Wilmington, Delaware
[9]Department of Biomedical Research, A.I. duPont Hospital for Children, Wilmington, Delaware
[10]Cardiology, Second University of Naples, Monaldi Hospital, Naples, Italy
[11]Medical Genetics, Bambino Gesù Pediatric Hospital, Rome, Italy
[12]Department of Pediatrics, Pediatric Cardiology, La Sapienza University, Rome, Italy
[13]Department of Medical Genetics, University of Calgary, Calgary, Canada
[14]Department of Medical Genetics, Tohoku University School of Medicine, Sendai, Japan
[15]Department of Pediatrics, Division of Cardiology, Doernbecher Children's Hospital, Portland, Oregon
[16]Service de Génétique Médicale, Centre Hospitalier Universitaire de Bordeaux, Bordeaux, France
[17]Genetic Health Services Victoria, Royal Children's Hospital, Victoria, Australia
[18]Division of Cardiology, Hospital for Sick Children, Toronto, Canada
[19]Department of Pathology, University of Kentucky Medical Center, Lexington, Kentucky
[20]Department of Pediatrics, University of California, San Diego, California
[21]Department of Pathology, Brigham and Women's Hospital, Boston, Massachusetts

Am J Med Genet 2011

Clinical syndrome	Costello syndrome, this study	Costello syndrome, literature[1–13]	CFC syndrome[14–17]	Noonan syndrome[19–24]	Noonan syndrome with multiple lentigines[25–27]	Noonan syndrome[31,32]	Noonan syndrome[33–35]	Multiple phenotypes[36–40,44]	Neuro-fibromatosis, type 1% [also, NF-NS][41–43]
Arrhythmia % total; % CV problem	34/61, 56% 34/52, 65%	34/85, 40% 34/76, 45%	5/53, 9% N.A.		4/20, 45%. NSVT 5/23, 22%		6/50, 12%	[17] 1 pt with HCM and unspecified	
MAT, EAT % total; % CV problem % arrhythmia	15/61, 25% 15/52, 29%	6/85, 7% 6/76, 8%	SVT	No	No	No	1 pt	No	No
Outcome % total arrhythmia	24/34, 71% Stable, self-limited	N.A.	N.A.	N.A.	N.A.	N.A.	N.A.	N.A.	N.A.
Aorta dilation % total; % any CV problem	4/61,7% 4/52, 7%	1 (Pt. 4)[2]	No	Rare	No[30]	No	No	No	No
Coronary artery abn. % total pts; % cardiac pts	No	1 (Pt 32)[3] Fibro-muscular dysplasia	No	No	Dilation [28,29] Peripheral aneurysms	No	No	No	Yes

- ✓ Tachicardia Atriale Mutifocale
- ✓ Tachicardia Atriale Ectopica
- ✓ Tachicardie Sopraventricolare
- ✓ Tachicardie Giunzionali
- ✓ Tachicardia Sinusale Inappropriata
- ✓ Late onset di Fibrillazione Atriale
- ✓ Tachicardie Ventricolari

ALTA EFFICACIA del trattamento medico

Am J Med Genet 2011

aritmie nella sindrome di Noonan

© 2019 EDIZIONI MINERVA MEDICA
Online version at http://www.minervamedica.it
Minerva Cardioangiologica 2019 mese;67(0):000–000
DOI: 10.23736/S0026-4725.19.04882-5

ECG in Noonan Syndrome:
beyond the "normal abnormalities"

G. Mazza, E. Banaudi, G.B. Ferrero,
G. Baldassarre, G. Agnoletti

- Preeccitazione Ventricolare (*PTPN11*)
- Tachicardia Parossistica Sopraventricolare (*SOS1*)

Nonreentrant atrial tachycardia occurs independently of hypertrophic cardiomyopathy in RASopathy patients

Mark D. Levin[1] | Sulagna C. Saitta[2] | Karen W. Gripp[3] | Tara L. Wenger[4] | Jaya Ganesh[5] | Jennifer M. Kalish[6] | Michael R. Epstein[7] | Rosemarie Smith[8] Richard J. Czosek[9] | Stephanie M. Ware[10] | Paula Goldenberg[11] | Angela Myers[12] | Kathryn C. Chatfield[13] | Matthew J. Gillespie[14] | Elaine H. Zackai[6] | Angela E. Lin[11]

Am J Med Genet 2018;176:1711-1722

TABLE 1 Genetic, arrhythmia and echocardiographic findings in 11 patients with RASopathies

Pt no Sex Genetic and molecular findings	1 F	2 M	3 F	4 M	5 M	6 M	7 F	8 F	9 M	10 F	11 M	Total F 5 M 6
Syndrome	CS	CS	NS	NS	NS	NS	NS	NS-ML	NS-ML	NS	NS	CS 2 NS 7 NS-ML 2
Age at disease presentation	Birth	4 mos	Birth	Birth	Birth	Birth	Birth	Birth, after cardiac eval	Birth after cardiac eval	2 wks	Birth	
Affected Gene	*HRAS*	*HRAS*	*RAF1*	*RAF1*	*RAF1*	*RAF1*	*PTPN11*	*PTPN11*	*PTPN11*	*SOS1*	*KRAS*	*HRAS* 2 *RAF1* 4 *PTPN11* 3 *SOS1* 1 *KRAS* 1
Base Change	c.35G>C	c.34G>A	c.770C>T	c.781C>T	c.770C>T	c.770C>T	c.188A>G	c.138G>A	c.1493G>T	c.2536G>A	c.173C>T	
AA Change	p.Gly12 Ala	p.Gly12 Ser	p.Ser257 Leu	p.Pro261 Ser	p.Ser257 Leu	p.Ser257 Leu	p.Tyr63 Cys	p.Ala461 Thr	p.Arg498 Leu	p.Glu846 Lys	p.Thr58 Ile	
Arrhythmia findings												
Age at Arrhythmia presentation	Prenatal: 35 wks	Postnatal: 8 mos	Postnatal: 7 days	Postnatal: 1 day	Postnatal: 4 years 1 mo	Postnatal: 3 mos	Postnatal: 2 mos	Postnatal: 3 wks	Postnatal: 2 mos	Postnatal: 4 mos.	Postnatal: 3 wks	Mean: 222 ± 95 days
MAT	Yes	No	Yes	Yes	Yes	Yes	No	Yes	No	Yes	No	7 Yes 4 No
EAT	Yes	Yes	Yes	Yes	Yes	Yes	Yes	Yes	Yes	Yes	Yes	11 Yes 0 No
SVT	No	Yes	No	No	Yes	Yes	No	No	No	No	Yes	4 Yes 7 No
Max arrhythmia rate (presenting ECG (bpm))	250	240	246	209	220	207	227	190	220's	Atrial rate 300's, ventricular rate 170	300	Mean: 227.4 ± 37.6
Treatment failures	Amio	None	Dig, Prop	Dig, Prop, Amio	Prop, Verap, Sotalol	Prop, Amio thyroid toxicity	Prop	Prop, Amio	Esmolol	Esmolol	None	6 Prop 2 Esmolol 2 Dig 4 Amio

(Continues)

Tachicardia atriale multifocale

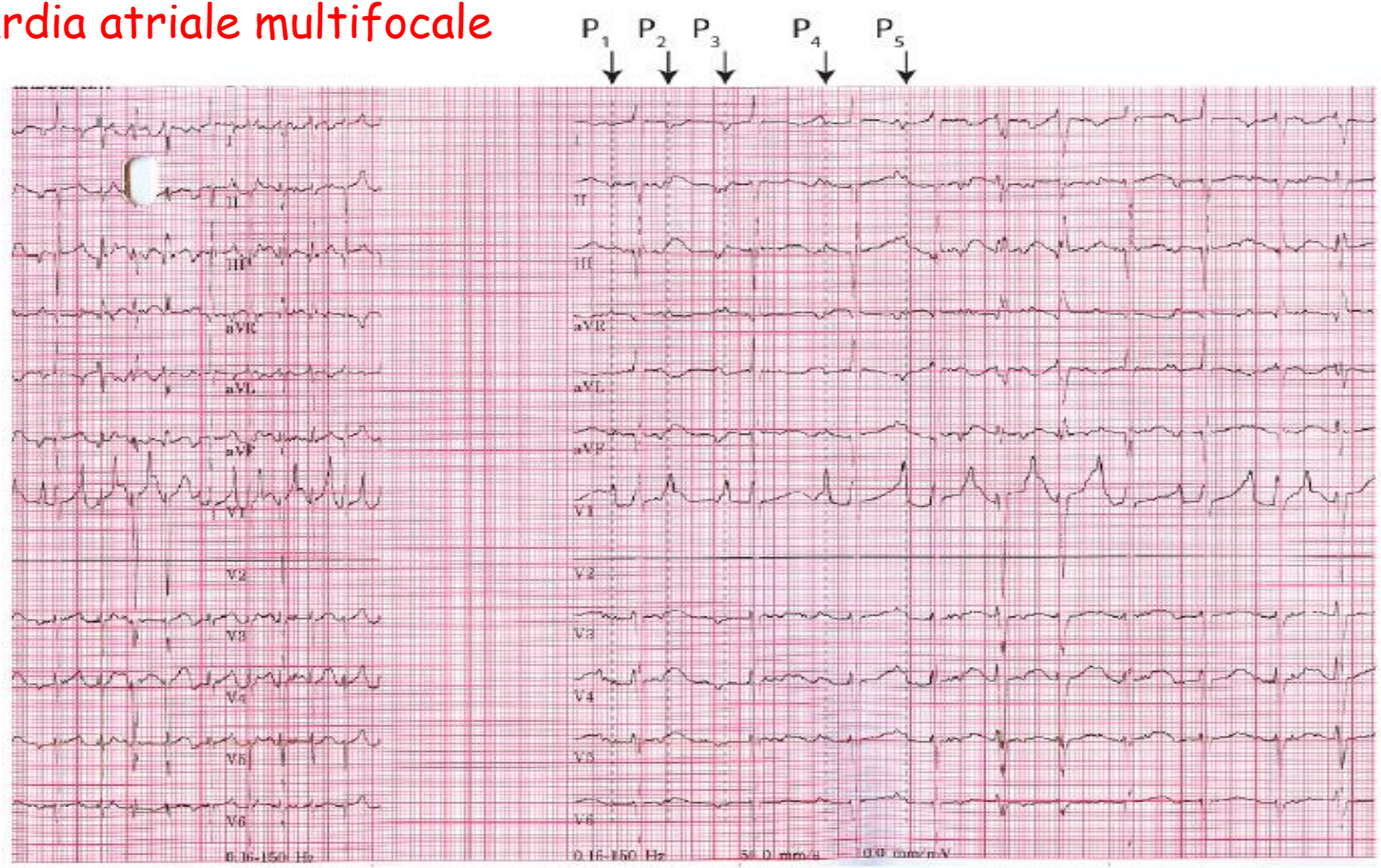

Sweep Speed = 25mm/s (standard)

Sweep Speed = 50mm/s (2x standard)

Tachicardia atriale ectopica

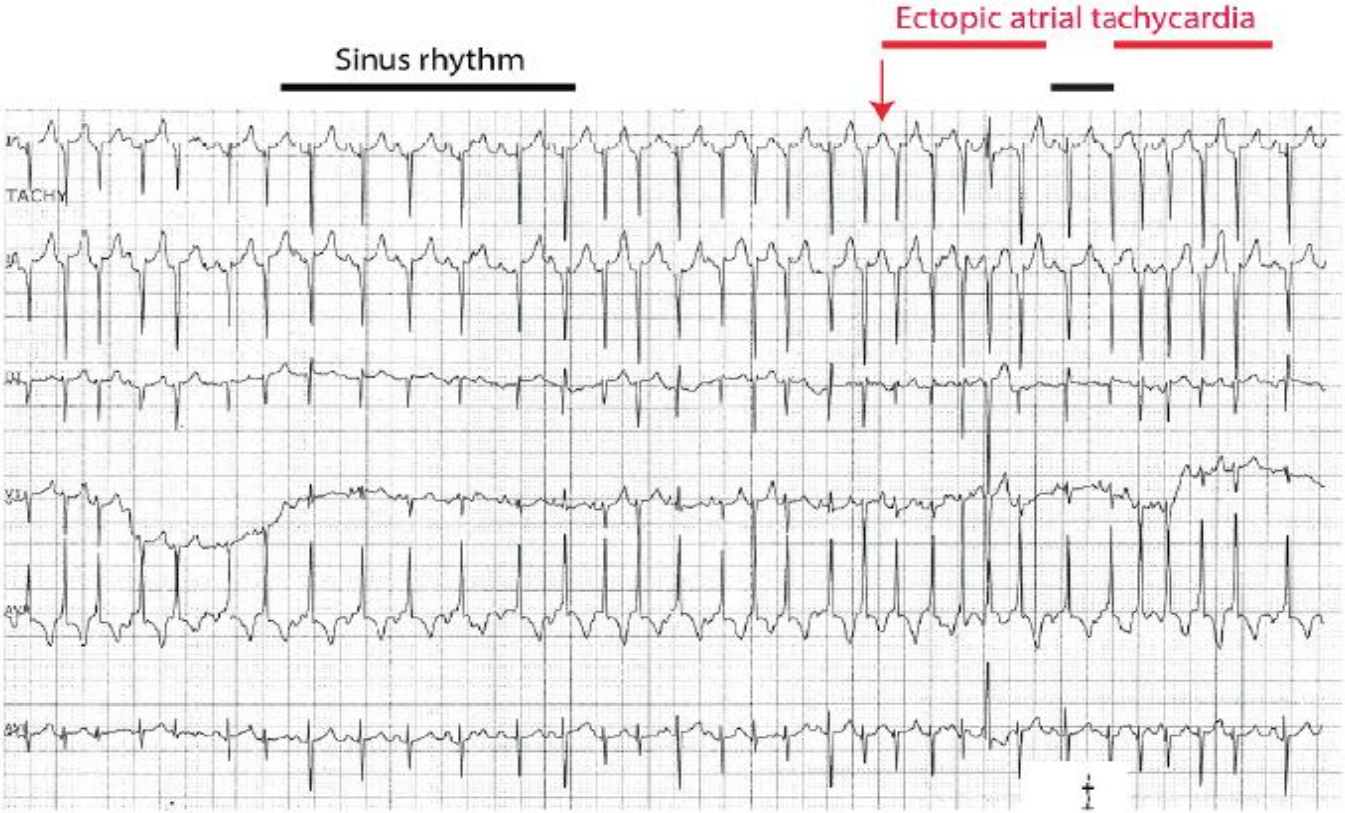

In conclusione

- ✓ importanza dello screening cardiologico alla diagnosi
- ✓ attenzione anche all'esordio di tachiaritmie in assenza di cardiopatia fin dal periodo neonatale

- ✓ sintomi insidiosi soprattutto nel neonato:
  - ➢ distress respiratorio
  - ➢ riduzione della tolleranza alimentare
  - ➢ irritabilità

UOC Cardiologia S Paolo, Palidoro, Santa Marinella ed Aritmologia

Responsabile: Dott Fabrizio Drago

SEDE S PAOLO

Ambulatorio di Cardiologia dedicato ai pazienti con sindromi genetiche

Contatto e prenotazioni:

06-68592464

giulio.calcagni@opbg.net

cardiologiadhsanpaolo@opbg.net

SEDE PALIDORO

Dh Cardiomiopatie

Contatto e prenotazioni:

06-68594084

cardiomiopatie@opbg.net